Logic Designing & Switching Theory

(CS-251)

Project Report

Syeda Amna Jafri	CT-24053
Faraiha Amir	CT-24058
Rida Fatima	CT-24060
Fatima Hasan	CT-24064

Task Requirements:

- CLO 1 (Combinational Logic): Design of gate logic to determine light activation based on the current state.
- CLO 2 (Sequential Logic): Design of the state machine using flip-flops to manage the light sequence and timing.
- CLO 3 (Modular Design): Integration of the state machine and output logic (and optionally timing/input handling) as separate modules into a complete system.

Circuit Overview

The provided digital circuit is a sequential logic system combining flip-flops and combinational logic gates to produce a controlled sequence of outputs. The circuit uses a 1Hz 50% duty cycle clock as its timing source and implements a state machine that drives three different outputs.

Components:

- 2 D Flip Flops
- 1 Hz Clock input (square wave, 50% duty cycle)
- 3 NOT gates
- 1 OR gate
- 3 AND gates
- 3 LED bulbs

Software Used: Electronics Workbench

Logic Diagram:

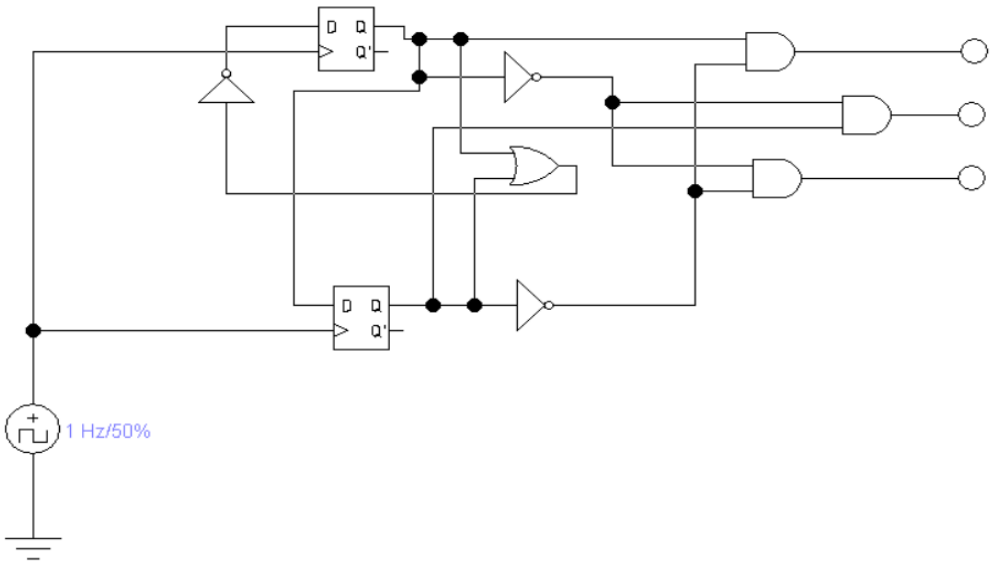

Truth Table (State Transition)

Q1	Q0	Red (R)	Yellow (Y)	Green (G)
0	0	1	0	0
0	1	1	1	0
1	0	0	0	1
1	1	0	1	0

Boolean Expressions

Next State Logic:

- $D0 = \bar{Q}0$
- $D1 = Q0 \oplus Q1$

Output Logic:

- Red Output $= \bar{Q}1$ (active in states 00 and 01)
- Yellow Output $= Q0$ (active in states 01 and 11)
- Green Output $= Q1 \cdot \bar{Q}0$ (active only in state 10)

State Transition Analysis

State Encoding and Transitions

The state machine uses two flip-flops (Q1 and Q0), allowing for four states:

- State 00: Initial/reset state
- State 01: Second state
- State 10: Third state
- State 11: Fourth state

From the logic in the circuit:

- The flip-flops are **clocked** by a 1 Hz clock.
- **Inputs to flip-flops** come from logic combinations of current outputs (`Q0`, `Q1`).
- It is a **synchronous counter**.

The next states would follow this cycle:

Current Q1 Q0	Next Q1 Q0
00	01
01	10
10	11
11	00

This is a **2-bit binary counter** in sequence.

Combinational Logic Analysis

<u>Input and Output Logic</u>

The circuit employs several combinational logic components to determine the output states based on the current state variables:

- NOT gates to complement signals
- AND gates to implement boolean product terms
- OR gates to combine product terms for final outputs

The combinational portion serves two key purposes:

1. Generating the next state logic for the flip-flops
2. Producing the appropriate output signals based on current states

Sequential Logic Analysis

State Machine Implementation

The circuit features two D flip-flops as the core of its sequential logic, providing four possible states (00, 01, 10, 11). These flip-flops store the current state of the system and transition to the next state on each clock pulse.

The clock signal provides the timing reference that synchronizes all state transitions. On each clock edge, the flip-flops capture their input values, which are determined by the combinational logic connected to their D inputs.

The feedback paths from the flip-flop outputs back to the combinational logic create a classic state machine architecture where the next state depends on both external inputs and the current state.

Modular Design Analysis

System Integration

The circuit demonstrates clear modular design principles with distinct functional blocks:

1. **State Storage Module**: The two D flip-flops form the state register component
2. **Next-State Logic Module**: Combinational logic determining the next state based on current state
3. **Output Decoder Module**: Logic gates that convert state information into meaningful output signals
4. **Clock Module**: Provides the timing signal (1 Hz, 50% duty cycle)

These modules are interconnected but functionally distinct, allowing for:

- Independent design and testing of each module
- Clear separation of concerns between state storage and output generation
- Simplified troubleshooting and modification
- Potential reuse of modules in other designs1

Summary

Thus the circuit function works as follows:

- The clock signal (1 Hz) drives the state transitions by triggering the D flip-flops
- On each clock pulse, the flip-flops capture their input values, changing the state
- The combinational logic between the flip-flops determines the next state based on the current state
- The output logic decodes the current state to activate the appropriate output signals
- Feedback paths ensure that the state machine cycles through its predetermined sequence
- The NOT gates and AND gates in the feedback path likely implement conditional state transitions
- The output AND gates activate specific outputs only when particular state conditions are met